ISLEVER

JN0-660

Service Provider Routing and Switching, Professional (JNCIP-SP)

DEMO

https://www.islever.com/jn0-660.html

https://www.islever.com/juniper.html

Topic 1, Volume A

QUESTION NO: 1

Click the Exhibit button.

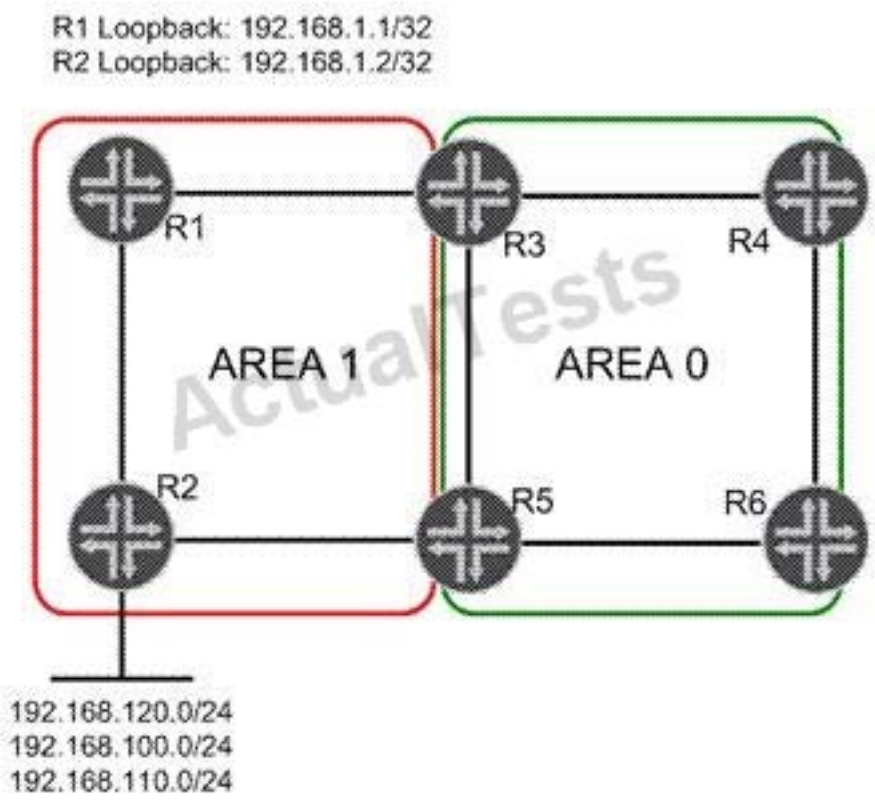

In the exhibit, Area 1 is a not-so-stubby area. Three networks are redistributed into Area 1 on R2. You must summarize the redistributed network addresses in Area 1 so that only one network prefix is re-advertised into Area 0. You must also summarize the loopback addresses of R1 and R2 into a single address in Area 0.Which configuration sample on R3 and R5 will complete this task?

A.
```
[edit protocols ospf area 0.0.0.1]
user@router# show
nssa {
    area-range 192.168.0.0/16;
    area-range 192.168.1.0/30;
}
```

B.
```
[edit protocols ospf area 0.0.0.0]
user@router# show
nssa {
    area-range 192.168.0.0/16;
    area-range 192.168.1.0/30;
}
```

C.
```
[edit protocols ospf area 0.0.0.1]
user@router# show
nssa {
    area-range 192.168.0.0/16;
}
area-range 192.168.1.0/30;
```

D.
```
[edit protocols ospf area 0.0.0.0]
user@router# show
nssa {
    area-range 192.168.0.0/16;
}
area-range 192.168.1.0/30;
```


A. Option A
B. Option B
C. Option C
D. Option D

Answer: C
Explanation:

QUESTION NO: 2

Click the Exhibit button.

```
[edit]
user@host# run show route

inet.0: 7 destinations, 10 routes (6 active, 0 holddown, 3 hidden)
@ = Routing Use Only, # = Forwarding Use Only
+ = Active Route, - = Last Active, * = Both

10.10.10.0/30       *[Direct/0] 06:35:12
                     > via ge-1/0/0.0
10.10.10.2/32       *[Local/0] 06:35:12
                       Local via ge-1/0/0.0
10.10.56.0/30       *[Direct/0] 03:55:10
                     > via ge-1/0/1.0
10.10.56.2/32       *[Local/0] 03:55:10
                       Local via ge-1/0/1.0
192.168.56.1/32     @[IS-IS/18] 00:00:05, metric 10
                     > to 10.10.56.1 via ge-1/0/1.0
                    #[RSVP/7/1] 00:00:00, metric 10
                     > to 10.10.56.1 via ge-1/0/1.0, label-switched-path to-r6
192.168.56.5/32     *[Direct/0] 02:06:50
                     > via lo0.0

inet.3: 1 destinations, 1 routes (1 active, 0 holddown, 0 hidden)
+ = Active Route, - = Last Active, * = Both

192.168.56.1/32     *[RSVP/7/1] 00:00:00, metric 10
                     > to 10.10.56.1 via ge-1/0/1.0, label-switched-path to-r6
```


Referring to the exhibit, which MPLS feature was used to make the LSP the preferred path for internal routes?

A. traffic engineering bgp-igp
B. traffic engineering shortcuts
C. traffic engineering mpls-forwarding
D. install active

Answer: C

Explanation:

QUESTION NO: 3

Click the Exhibit button.